Tri-Guard

Vertical Bar Railings | Jacksons Security

Jacksons Fencing
Stowting Common | Ashford | TN25 6BN
www.jacksons-security.co.uk
+44 (0) 1233 750 393

Jacksons
Quality that lasts
Fencing & Access Solutions

Inside view

Detail of panel cluster

Applications

✓ Parks ✓ Schools ✓ Residential

✓ Demarcation ✓ Low - Medium Risk ✓ High Risk

Gates

Matching gates are available in swing, cantilever sliding and tracked in either automated or manual operation. Please ask for specifications and details.

High Security Upgrade

Upgrade the security with adding of our security topping for detection systems, please ask a sales advisor for more information.

Specify us, register online to download detailed and specific drawings and diagrams of our security products

Standards

- 100mm pale spacing complying with Building Regulations for anti-trap

Finish Options

- Post, pales and rails are galvanized to BS EN 1461 as standard
- Galvanized and powder coated to BS EN 13438 in one of our standard colours at extra cost
- Powder coating to non standard BS or RAL to special order
- Marine coat coating for applications near salt water (optional extra)

Installation Options

- Cranked posts bolted to wall
- Base plated posts
- Clad with mesh
- Sheeted

Tri-Guard

Specifications and Technical Data

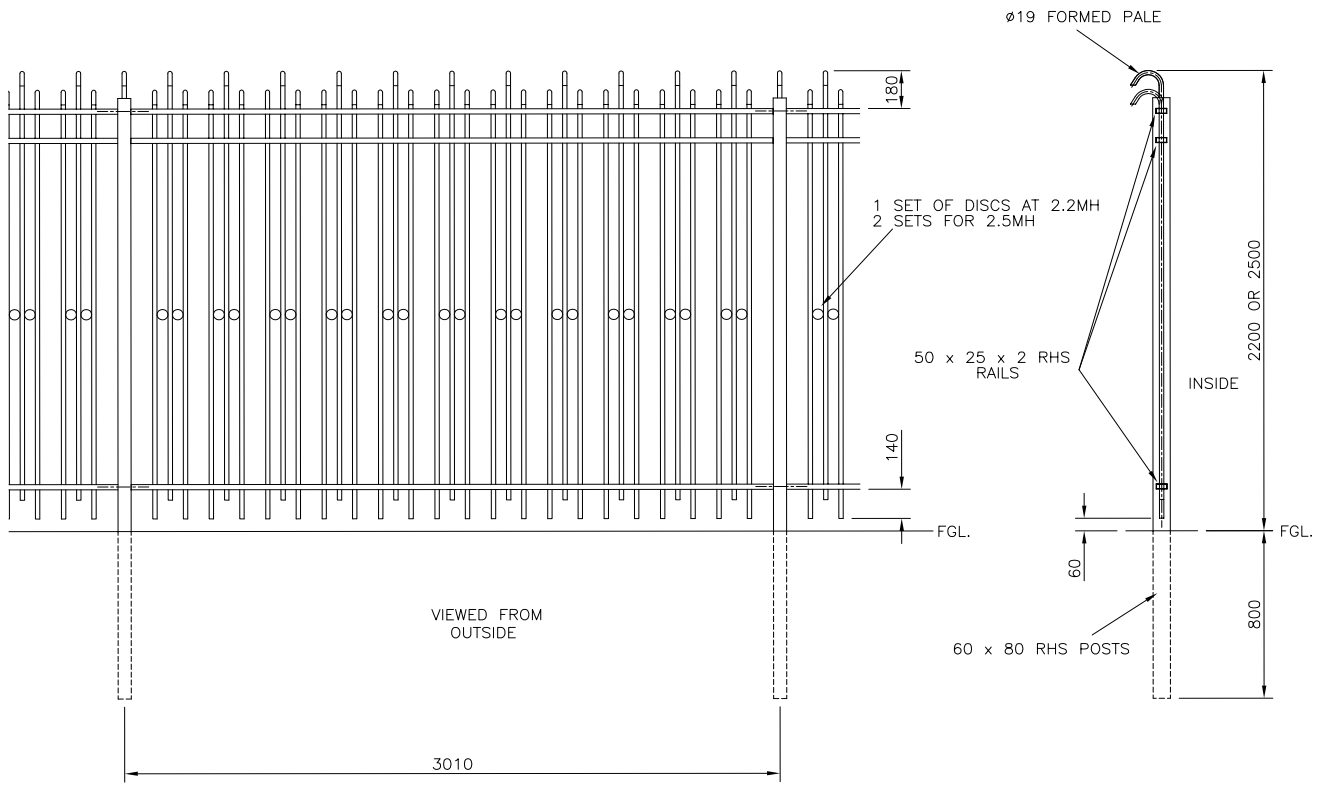

Straight Connector Detail

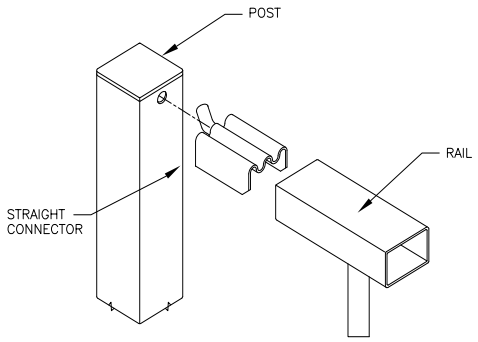

Standard dimensions				Foundation Sizes (size mm)	
Height	Pales	Posts Centre	Post size	Set in Concrete (L x W x D)	Base Plated (L x W x D)
2.25m	19mm round pales	3.0m centres	80 x 60mm	250 x 250 x 800	350 x 300 x 430
2.5m	19mm round pales	3.0m centres	80 x 60mm	250 x 250 x 800	350 x 300 x 430

Tri-Guard